Int. J. Electron. Commun. (AEÜ) 66 (2012) 395–400

Contents lists available at SciVerse ScienceDirect

International Journal of Electronics and Communications (AEÜ)

journal homepage: www.elsevier.de/aeue

A new triple proximity-fed circularly polarized microstrip antenna

Yohandri [a,b], Josaphat Tetuko Sri Sumantyo [a], Hiroaki Kuze [a]

[a] Josaphat Microwave Remote Sensing Laboratory, Center for Environmental Remote Sensing, Chiba University, 1-33 Yayoi-cho, Inage-ku, Chiba, 263-8522, Japan
[b] Physics Department, State University of Padang, Jl. Prof Dr. Hamka Air Tawar, Padang, Sumatera Barat 25131, Indonesia

ARTICLE INFO

Article history:
Received 12 July 2011
Accepted 26 September 2011

Keywords:
Circular polarization
Circular microstrip antenna
Triple proximity-fed

ABSTRACT

A novel circularly polarized microstrip antenna using triple proximity-fed method is proposed in this paper. The circular polarization radiation is produced by adjusting 120° phase shift between the feeds. In the feeding network, a three-way circular-sector power divider is adopted to distribute the current equally to each feed. A method of moments is employed for optimizing the design and achieving a good circular polarization at the center frequency of 1.28 GHz. The measured result shows that 3-dB axial ratio bandwidth and maximum gain are about 0.68% (8.7 MHz) and 7.11 dBic, respectively, which are consistent with the simulated values of 0.70% (9.0 MHz) and 7.21 dBic. The narrow bandwidth and reasonable gain indicate that this antenna is promising for various applications in L-band.

1. Introduction

Although linear polarization has widely been employed for various applications, its use has a certain limitation in applications related to the propagation in the ionosphere, since the interaction of electrons and magnetic fields causes Faraday rotation disturbances [1,2]. One possible solution to reduce or eliminate this problem is radiating the microwave in circular polarization (CP) [3]. Therefore, it is expected that CP antennas are useful in transmitting and receiving the microwave for spaceborne applications such as radar, communication, and global positioning systems [4–6].

In antenna development, the requirement for smaller and low profile antennas has led to the popularity of microstrip antennas as compared with more bulky, conventional antennas. Additional advantages of microstrip antennas are light weight, low cost, and easier integration with other circuits and versatility [7]. In order to simplify the antenna design, an antenna patch is usually designed to be square or circular, resulting in a square microstrip antenna (SMA) or a circular microstrip antenna (CMA). In the dual feed design for both SMA and CMA, the CP radiation can be achieved by providing currents with equal amplitude and mutual phase difference of 90° [8]. Alternatively, single feed approach has also been studied with configuring the shape of the radiator [9,10]. A previous work demonstrated that an equilateral triangle patch CP antenna can be realized with proximity-coupled dual feeding [11]. The antenna performance of this CP antenna, however, was not satisfactory in terms of both 3-dB axial ratio bandwidth and antenna gain. Hence, in the present paper we introduce a novel, compact design of multiple fed microstrip antenna, namely a triple proximity-fed CMA. The antenna is designed to operate in L-band (1.28 GHz) and intended for various applications such as circularly polarized synthetic aperture radar (CP-SAR), global positioning system (GPS), etc. The design of the proposed antenna will be given in Section 2, and the measurement system in Section 3. The results and discussion will be given in Section 4.

2. Design of proposed antenna

The circularly polarized radiation can be realized on a microstrip element by exciting two orthogonal modes with equal amplitudes, which have a quadrature phase relationship. The performance of CP

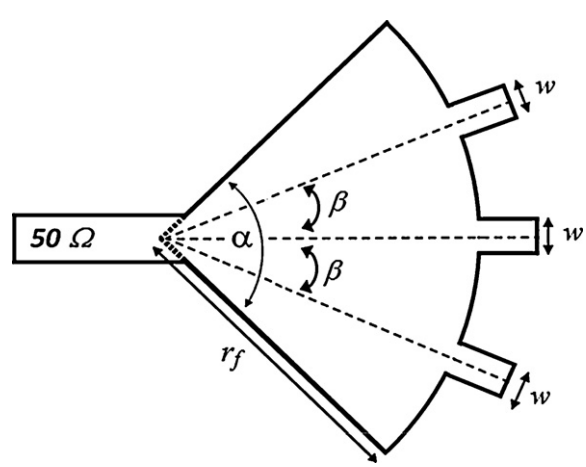

Fig. 1. The three way circular-sector shape power devider.

E-mail address: andri_unp@yahoo.com (Yohandri).

1434-8411/$ – see front matter © 2011 Elsevier GmbH. All rights reserved.
doi:10.1016/j.aeue.2011.09.008

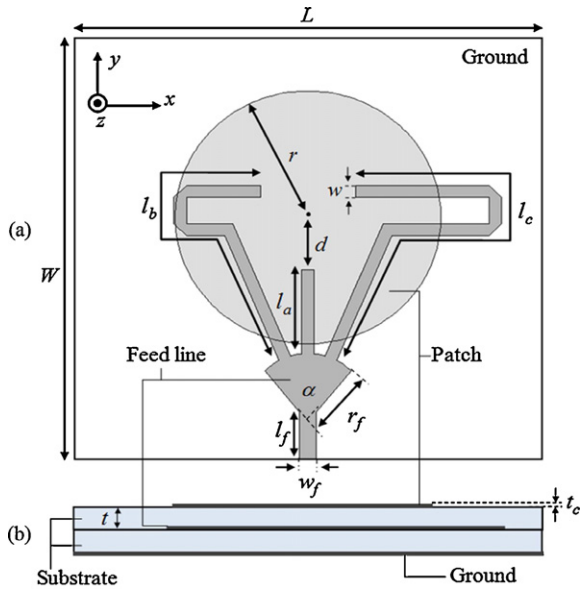

Fig. 2. Geometry design of triple proximity-fed CMA; (a) top view, and (b) side view.

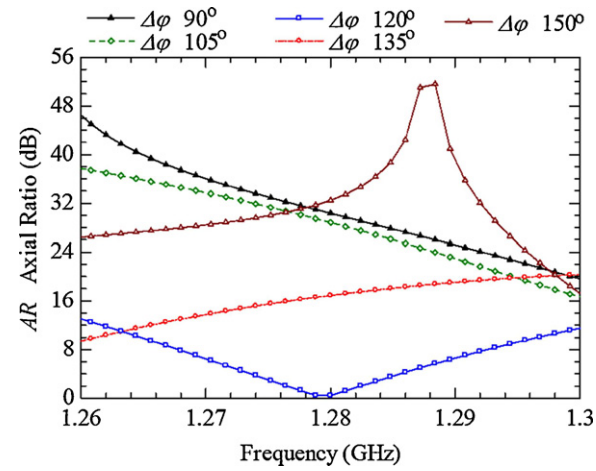

Fig. 3. Simulation results showing the frequency dependence of the axial ratio (*AR*) of the CMA for various values of phase shift applied to the feeds.

antenna is characterized by a parameter called axial ratio (*AR*), the value of which is defined as the ratio of the major axis to the minor axis of the polarization ellipse, commonly given in units of dB. In addition, the sense of polarization can be classified into two types, namely left-hand CP (LHCP) and right-hand CP (RHCP), indicating the sign of the relative phase [12].

In the present design, the CP radiation is produced with a triple-fed CMA. The phase shift among the three feeds is adjusted in a range including the conventional value of 120° [13], so as to give the best *AR* smaller than 3 dB. The network feeding is implemented in proximity-coupled method [14] and a circular-sector stub is adopted as a power divider, which enables to share the current distribution equally for odd-number feeding as well. The power from a 50-Ω feed line is divided symmetrically in the sector by placing each feed at an angular distance of $\beta = 22.5°$, with a width (w) of the feed of 4.3 mm and radius (r_f) of the circular-sector of 20.5 mm

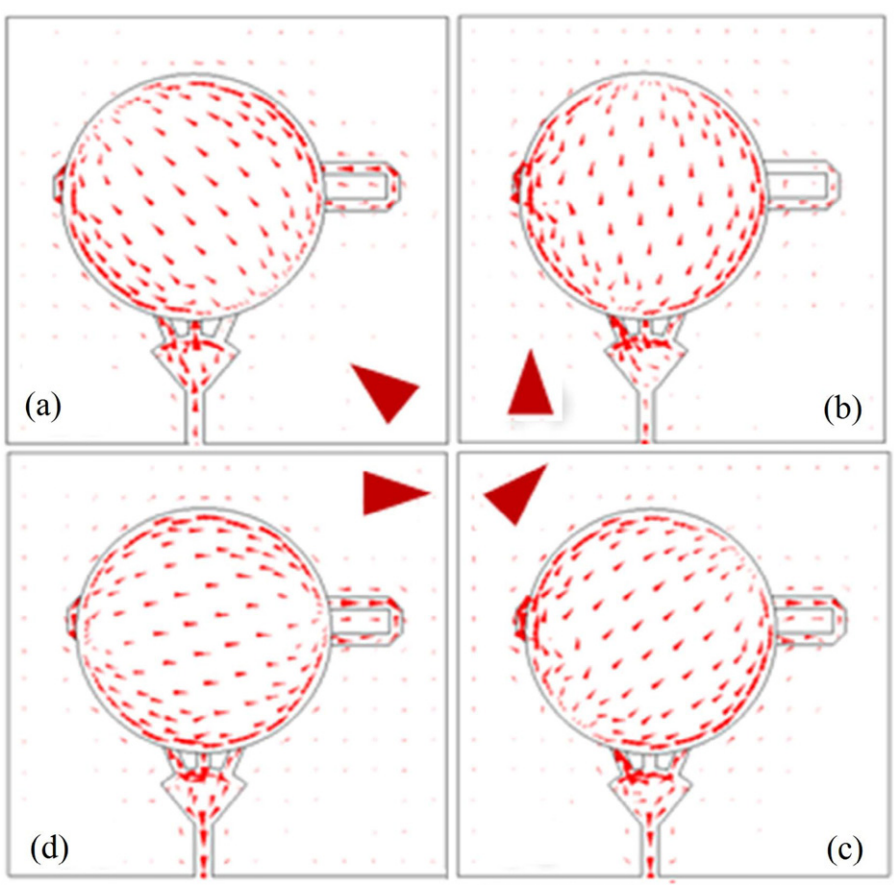

Fig. 4. Vector current distribution of the designed CMA for various source phase, (a) $\phi_s = 0°$, (b) $\phi_s = 45°$, (c) $\phi_s = 90°$, and (d) $\phi_s = 135°$.

Table 1
Triple proximity-fed parameters (in units of mm).

Parameters	w	d	l_a	l_b	l_c	l_f	w_f
Size	4.3	20.1	28.6	93.0	144	18.0	5.7

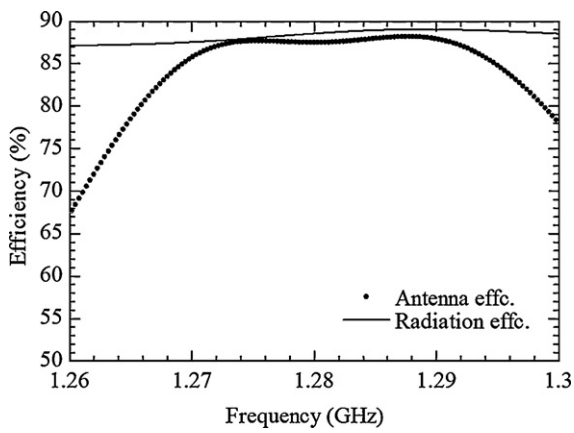

Fig. 5. The efficiency of the antenna configuration as a function of frequency.

(Fig. 1). The sector angle α, of the power divider is selected to be 90° to obtain the optimal performance [15].

The geometry design of the proposed antenna is shown in Fig. 2. The antenna is fabricated on two layers of dielectric substrate, each having thickness $t = 1.6$ mm, conductor thickness $t_c = 35$ μm, dielectric constant $\varepsilon_r = 2.17$ and loss tangent 0.0005. The radius of the radiator (r) is 43.56 mm, while the ground plane size ($L \times W$) is 154 mm × 150 mm. Other parameters of the CMA are listed in Table 1.

The sense of polarization (LHCP or RHCP) can be determined by turning the sequence of phase shift in the feeding network. In this report, the CMA is designed to generate LHCP by adjusting the 120° phase shifted between l_a, l_b and l_c, clockwise. The method of moments (the IE3D simulation software) with a finite ground plane model is employed to optimize the geometrical design of the antenna. During the optimization process of the CMA configuration, it was observed that the choice of phase shift among l_a, l_b and l_c significantly affects the *AR* of the emitted CP radiation. The simulated result of the *AR* is shown in Fig. 3 as a function of frequency for various values of the phase shift ($\Delta\varphi$). The best CP radiation is found for phase shift around 120°($\lambda/3$).

Fig. 4 shows the vector current distribution of the prototype antenna for various source phases (ϕ_s). The directions and sizes of the vectors are affected by the phase of the sinusoidal wave given to the main feed. In Fig. 4, it can be seen that the rotation of vectors is in the clockwise direction, indicating the sense of polarization. The simulated efficiency of the present antenna design is shown in Fig. 5. This result indicates that more than 87% of the power from the source can be radiated by the antenna into space. Moreover, the ratio of the total power dissipated by the antenna to the net power accepted by the antenna at its terminals during the radiation process (radiation efficiency) is around 88%. These high values are in line with good efficiencies characterizing microstrip antennas [16].

3. Antenna measurement

The proposed CMA was fabricated as depicted in Fig. 6. To ensure the similarity between the simulated and fabricated results, careful and precise fabrication process is required. A RF Vector Network Analyzer (Agilent VNA E8364C) was used for characterizing the antenna. The antenna gain, AR, and radiation patterns were measured inside the anechoic chamber of our laboratory. Two conical log spirals (LHCP and RHCP) and a dipole antenna were used as standard reference antennas. Extra caution was taken to precisely align the antenna under test (AUT) and the reference antenna in order to obtain accurate measurement results. The schematic of the measurement system and photograph of AUT are shown in Fig. 7.

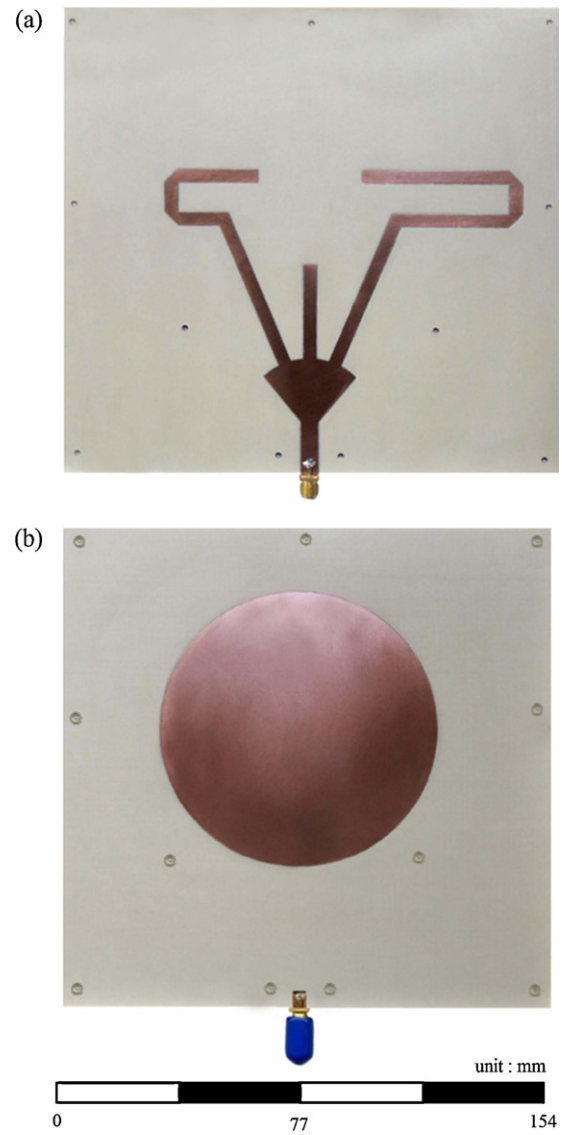

Fig. 6. Photograph of fabricated CMA: (a) triple proximity-fed, and (b) circular radiator.

4. Results and discussion

In this section, the comparison between the simulated and measured results is presented in Figs. 8–12, in terms of reflection coefficient (S_{11}), input impedance (Z_{in}), axial ratio (*AR*), Gain (G) and radiation pattern. In Fig. 8, the reflection coefficient (S_{11}-parameter) is plotted as a function of frequency. At the center of working frequency (1.28 GHz), the reflection coefficient of the measured result is around −19.0 dB, which is consistent with the simulated value of −19.1 dB. A good agreement in −10 dB impedance bandwidth of 34 MHz is obtained for both measured and

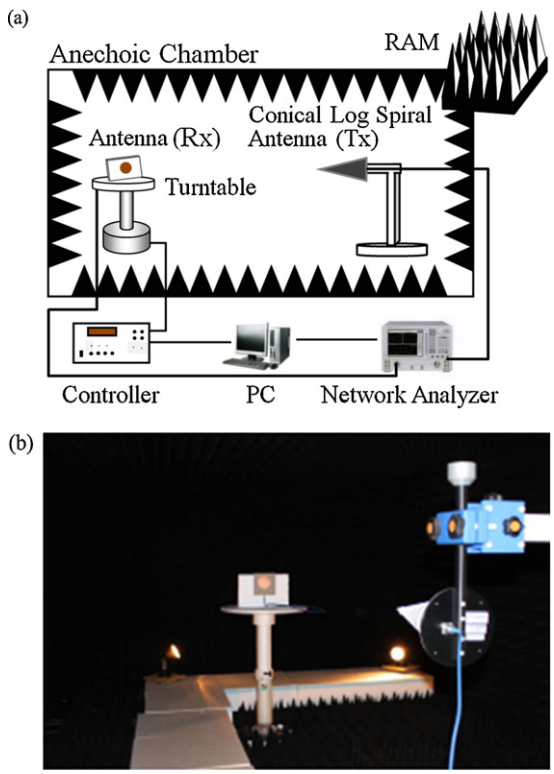

Fig. 7. Measurement of antenna characteristics: (a) schematic of the measurement system, and (b) a photograph of AUT in the anechoic chamber of CEReS.

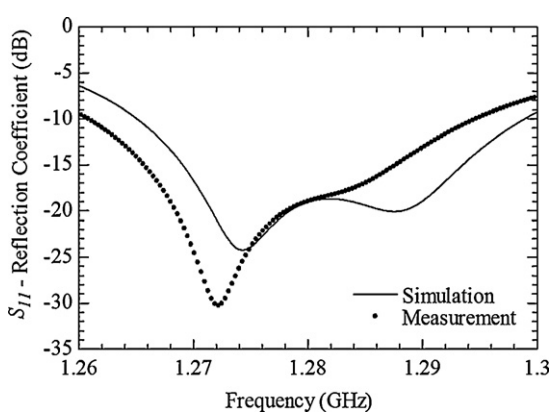

Fig. 8. Simulated and measured reflection coefficient vs. frequency.

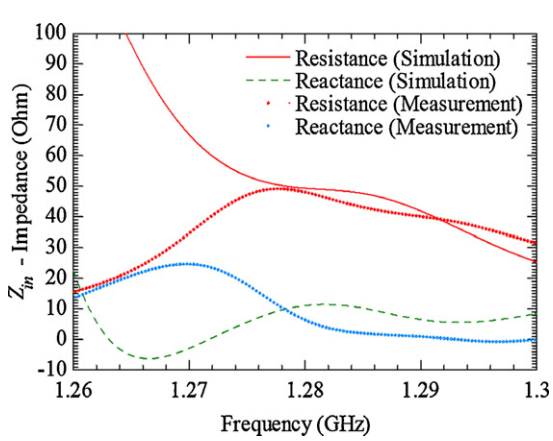

Fig. 9. Simulated and measured input impedance (Z_{in}) plotted as a function of frequency.

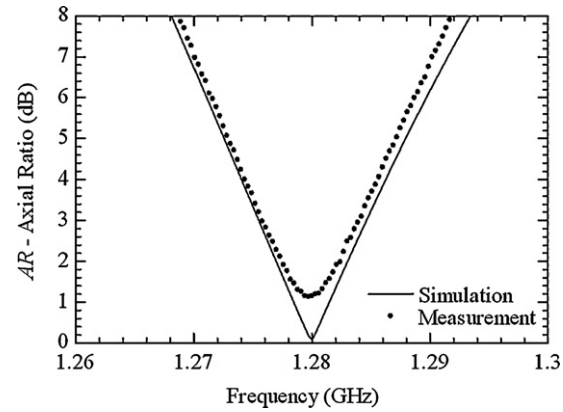

Fig. 10. Simulated and measured axial ratio (AR) vs. frequency at $\theta = 0°$.

simulated results, though the measured result exhibits a minimum impedance at around 1.272 GHz, 0.3% shifted from the designed frequency. This frequency shift is presumably due to the effect of errors in the antenna fabrication process (e.g., milling error of about 0.05 mm) and the influence of the ground plane size.

In Fig. 9, the input impedance is plotted against the frequency. The measured value at the working frequency of 1.28 GHz is 48.09 Ω and 6.44 Ω for input resistance and input reactance, respectively. The input resistance is about 2.6% smaller than the simulated value of 49.36 Ω, probably resulting from the resistance of a connector and soldering. Nevertheless, both the simulated and measured results provide good matching in impedance nearly equal to 50 Ω.

The relation between the AR and frequency is shown in Fig. 10. The 3-dB AR bandwidth achieved at the direction of $\theta = 0°$ (i.e., the AUT is set perpendicular to the standard reference antenna) is about 8.7 MHz, which corresponds to 0.68 % of the operation frequency of 1.28 GHz. In the simulation, on the other hand, the value is 9.0 MHz, or around 0.70% of the operation frequency. The minimum values of AR are obtained to be 0.08 dB and 1.13 dB for simulation and measurement, respectively. A possible cause of this discrepancy is the deviation of the phase shift among the three feeds due to slight inaccuracy in the milling process of the feeding network, for instance. The difference in the ground plane size can also lead to such a slight degradation of the 3-dB AR bandwidth. When the ground plane size is increased, the edge-diffracted fields cause tilting of the beam in the direction of low elevation angles and reduce the maximum gain, ultimately affecting the characteristics of the AR [17].

The antenna gain is simulated and measured as a function of frequency (Fig. 11). From this figure, it can be seen that the

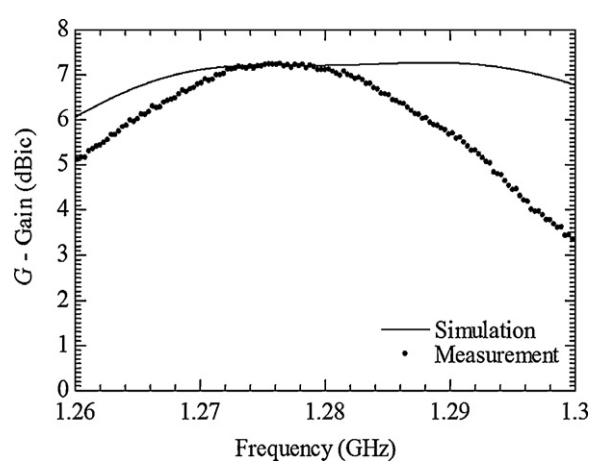

Fig. 11. Simulated and measured gain (G) vs. frequency at $\theta = 0°$.

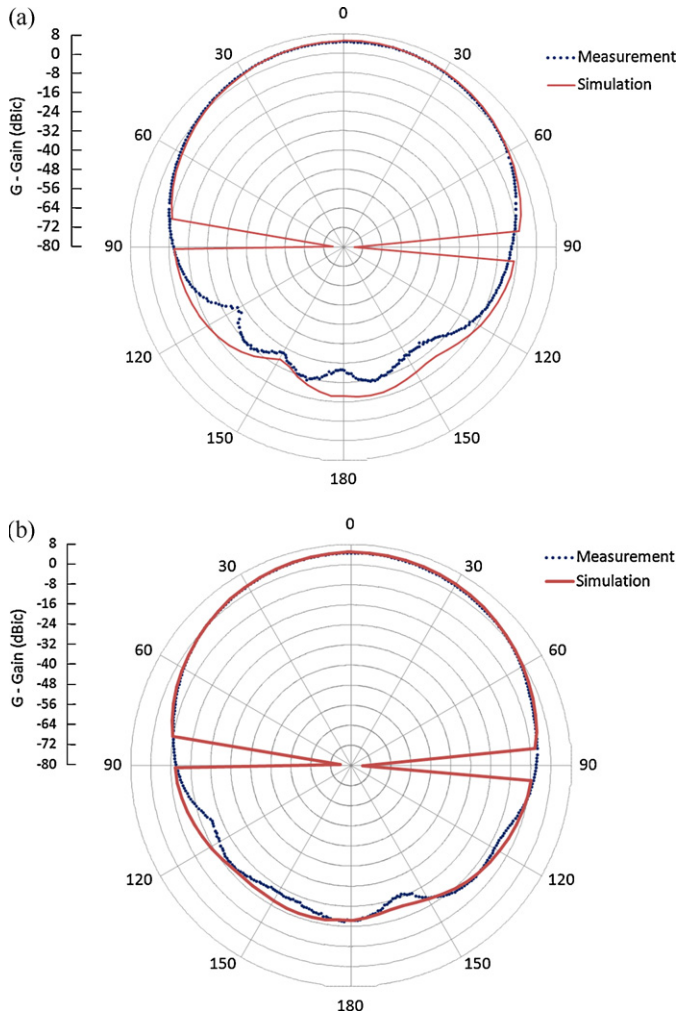

Fig. 12. Measured and simulated radiation pattern of proposed antenna at $f = 1.28$ GHz: (a) in the x–z plane ($Az = 0^\circ$ and 180°), and (b) y–z plane ($Az = 90^\circ$ and 270°).

measured value of the maximum gain is about 7.2 dBic at 1.275 GHz, whereas the gain measured at 1.28 GHz is 7.11 dBic. This value is by 0.1 dBic lower than the value expected from the simulation. Such a difference between the simulated and measured results may possibly be ascribed to the loss of the substrate that supports the proximity feeding.

Fig. 12(a) and (b) shows the radiation patterns in the x–z and y–z plane, respectively. Both measured and simulated patterns at 1.28 GHz are plotted. In Fig. 12(a), the measured maximum gain at the azimuth angle of $Az = 0^\circ$ is about 6.6 dBic, by approximately 0.6 dBic lower than the simulated gain of 7.2 dBic. The 3-dB beamwidth of the fabricated antenna is about 91°, larger than the simulated beamwidth of 87°. In y–z plane, similar patterns appear as seen in Fig. 12(b). The peak gain from the measurement is 6.8 dBic with a half power (3-dB) beamwidth of around 87°, while the simulated peak is about 7.2 dBic with the half-power beamwidth of 90°. The both y–z and x–z plane radiation patterns exhibit the typical nulls on the dipole axis (x-axis), at θ angles 90°. The results shown in Fig. 12(a) and (b) indicate that the agreement between the simulation and measurement is reasonable in terms of the gain performance. The slight difference seen in gain patterns may be ascribable to the imperfection on the measurement process, namely slight variations in antenna alignment during rotation.

5. Conclusion

A novel triple proximity-fed CMA has been described for the generation of circular polarization radiation. Good CP performance has been attained over a 3-dB axial ratio bandwidth of around 8.7 MHz, with fairly high gain of about 7.11 dBic in the operating band (1.28 GHz). In general, numerical analyses using the method of moments can lead to a good agreement with experimental results. The slight differences of antenna performance between the simulation and measurement are probably due to imperfection during the fabrication and measurement processes. With its good performance, this novel antenna design will be useful for several L-band applications such as circularly polarized synthetic aperture radar, mobile communication, and global positioning system.

Acknowledgements

The authors would like to thank Dr. Luhur B., Prilando R.A., Bambang S. and Iman F., for valuable suggestions and sharing the knowledge; National Institute of Information and Communication Technology (NICT) for International Research Collaboration Research Grant; Chiba University COE Start-up Programme "Small Satellite Institute for Earth Diagnosis"; and The Japan Society for The Promotion of Science (JSPS) Japan – East Network of Exchange for Students and Youths (JENESYS) Programme.

References

[1] Vine DML, Jacob S, Dinnat E, de Matthaeis P, Abraham S. The influence of antenna pattern on Faraday rotation in remote sensing at L-band. IEEE Transactions on Geoscience and Remote Sensing 2007;45:2737–46.
[2] Rignot E. Effect of Faraday rotation on L-band interferometric and polarimetric synthetic-aperture radar data. IEEE Transactions on Geoscience and Remote Sensing 2000;38:383–90.
[3] Maini A, Agrawal V. Satellite technology: principles and applications. England: John Wiley; 2007.
[4] Sumantyo JTS, Wakabayashi H, Iwasaki A, Takahashi F, Ohmae H, Watanabe H, et al. Development of circularly polarized synthetic aperture radar onboard microsatellite. In: Progress in Electromagnetic Research Symposium (PIERS). 2009. p. 382–5.
[5] Sumantyo JTS, Ito K, Takahashi M. Dual-band circularly polarized equilateral triangular-patch array antenna for mobile satellite communications. IEEE Transactions on Antennas and Propagation 2005;53:3477–85.
[6] Hua M, Yang K, Yi F, Che Y, Shan C. Microstrip-fed circularly polarized square-ring patch antenna for GPS applications. IEEE Transactions on Antennas and Propagation 2009;57:1264–7.
[7] Ramesh G, Prakash B, Inder B, Apisak I. Microstrip antennas design handbook. London: Artech House; 2001.
[8] Kumar G, Ray K. Broadband microstrip antennas. London: Artech House; 2003.
[9] Raul R, Franco D, Nicolaos G. Single-feed circularly polarized microstrip ring antenna and arrays. IEEE Transactions on Antennas and Propagation 2000;48:1040–7.
[10] Boyon K, Bo P, Symeon N, Young S, John P, Manos M. A novel single-feed circular microstrip antenna with reconfigurable polarization capability. IEEE Transactions on Antennas and Propagation 2008;56:630–8.
[11] Baharuddin M, Wissan V, Sumantyo JTS, Kuze H. Equilateral triangular microstrip antenna for circularly polarized synthetic aperture radar. Progress in Electromagnetics Research C 2009;8:107–20.
[12] Stutzman WL. Polarization in electromagnetic system. London: Artech House; 1993.
[13] Chen L, Fu S, Yong C, Fan Z, Xin X. A three-fed microstrip antenna for wideband circular polarization. IEEE Antennas and Wireless Propagation Letter 2010;9:359–62.
[14] Pozar D, Kaufman B. Increasing the bandwidth of a microstrip antenna by proximity coupling. Electronics Letters 1987;23:368–9.
[15] Abouzahra M. Multiport power divider-combiner circuits using circular-sector-shaped planar components. IEEE Transactions on Microwave Theory and Techniques 1988;36:1747–2529.
[16] Faiz M, Wahid P. A high efficiency L-band microstrip antenna. In: Antennas and Propagation Society International Symposium IEEE. 1999. p. 272–5.
[17] Sumantyo JTS, Ito K, Delaune D, Tanaka T, Onishi T, Yoshimura. Numerical analysis of ground plane size effects on patch array antenna characteristics for mobile satellite communications. International Journal of Numerical Modelling: Electronic Networks. Devices and Fields 2004:95–106.

Yohandri was born in Bayur, Maninjau, Indonesia, in 1978. He received his B.Sc. degree in physics specializing in physics instrumentation from State University of Padang, Indonesia, in 2001 and M.Sc. degree also in physics from Bandung Institute of Technology, Indonesia, in 2005. He is a lecturer in Physics Department, Faculty of Mathematics and Natural Science, State University of Padang, Indonesia. Currently, he is a doctoral student in Graduate School of Advanced Integration Science, Chiba University, Japan.

Josaphat Tetuko Sri Sumantyo was born in Bandung, Indonesia, 1970. He received the B.Eng. and M.Eng. degrees in electrical and computer engineering from Kanazawa University, Japan, in 1995 and 1997, respectively, and the Ph.D. degree in artificial system sciences from Chiba University, Japan, in 2002. From 1990 to 1999, he was a Researcher with the Indonesian Governmental Agency for Assessment and Application of Technology (BPPT) and the Indonesian National Army (TNI-AD). In 2000, he was with the Center for Environmental Remote Sensing (CEReS), Chiba University, as a research assistant, and from 2002 to 2005, he was a post doctoral fellowship researcher with the Center for Frontier Electronics and Photonics, Chiba University. He has been a director with the Remote Sensing Research Center, Pandhito Panji Foundation, Indonesia since 2000. From 2005, he is permanently as associate professor with the Microwave Remote Sensing Laboratory, CEReS, Chiba University. His main interests include analysis of printed antennas for mobile satellite communications, aircraft and microsatellite onboard synthetic aperture radar, scattering wave analysis and its applications in microwave remote sensing. He is a Member of the IEEE, IEICE, JSPRS, and RSSJ and has received many awards and research grants related to his study and research.

Hiroaki Kuze finished the graduate school of University of Tokyo in 1982, obtaining the Ph.D. degree in physics in the field of quantum electronics. After working as a post-doctoral researcher for the Institute for Physical and Chemical Research (RIKEN), in 1984 he became a research assistant and in 1986 an associate professor in the physics department, faculty of liberal arts, Shizuoka University. During 1987–1988, he stayed at the Institute for Quantum Optics, Max-Planck Institute in West Germany as a visiting scientist. From 1995 to 2004, he worked as an associate professor with the Center for Environmental Remote Sensing (CEReS), Chiba University, and in 2004 he became a professor. From 2010 he is the director of CEReS. His major research field is optical remote sensing of the atmosphere.