ISBN : 978-602-1178-11-9

Bukittinggi, October 16-17, 2015

# PROCEEDINGS

# 3rd International Conference on Technical and Vocational Education and Training (TVET)

## Theme :

## Technical and Vocational Education and Training for Sustainable Societies


PENERBITAN & PERCETAKAN UNP PRESS
Jln. Prof Hamka Air Tawar Padang,
Telp. (0751) 7051260, 7055689 Fax (0751) 7055628

UNP PRESS

Penerbitan & Percetakan
UNP PRESS

# FOREWORDS

This proceeding aims to disseminate valuable ideas and issues based on research or literature review in the field of vocational , technical and engineering studies, which have been presented in 3rd International Conference on TVET. This conference have taken place in Rocky Hotel Bukittinggi West Sumatra, october 16 and 17, 2015.

The theme of Conference focused on the perspective of technical and vocational education and training for sustainable society to face the chalenges of 21st century, globalization era, and particularly Asian Economic Community. To overcome the challenges, we need the innovation and change in human resources development. Vocational and technical education and training have essential roles to change the world of education and work in order to establish sustainable society.

Undoubtedly, TVET need to enhance the quality of learning by developing various model of active learning, including learning in the workplace and entrepreneurship. Create innovation and applied engineering as well as information technology. Improvement of management and leadership in TVET Institution, and develoment of vocational and technical teacher education.

Many ideas and research findings have been shared and discussed in the seminar, more then 70 papers hava been collected and selected through scholars, saintists, technologist, enginers .as well as teachers, profesors,and post graduates students who participated in the conference.

Five keynote speakers have taken apart in the conference, namely Prof. D. Stein Ph.D (Ohio State University-USA), Prof. Yusuke Ono (Tottori University- Japan), and Prof. Nashruddin A. Rahim Ph.D (University of Malaya, Malaysia), and Prof. dr. Ali Gufron Ph.D (Directorate General of Human Resources Development in Higher Education-Indonesia), and Syahril Ph.D (Dean of Faculty Engineering UNP-Padang). They all have a great contributions for the success of the conference.

Finally, thank a million for all participants of the conference who supported the success of 3rd International conference onTVET 2015. and most importantly, our gratitude to all scholars who support and tolerated our mistake during the conference.

Padang, 9 Oktober 2015

**Prof. Dr. Nizwardi Jalinus, M.Ed**
Chair of Scientific Committee

# TABLE OF CONTENTS

# Transient Response Study on Transformer Windings Under Impulse Voltage Stresses

Hendri Masdi[1], Rusnardi Rahmat[2]

[1,2]Faculty Of Engineering, Padang State University, Indonesia

**Abstract—** The study reported in this paper was aimed to investigate transient response of power transformer when lightning current pass through its winding. Analysis of distribution voltage at the winding taps was done, both by experimental and numerical simulation, by applying IEC-71 standard current surge (8/20 µsimpulse current and 1.2/50 µs impulse voltage). Transformer's constants as: R, L, C were derived from the transformer construction, which consists of 9 winding layers at HV-side.The wave-shapes of the voltage across the winding sections were recorded. The response of the windings was then compared with results of a simulation using EMTDC/PSCAD.The simulation based on an RLC network model resulted in wave-shapes that are in good agreement to those of the experiment. Both results of the simulation and experiment show that the distribution of the impulse voltage across the windings is non linear, especially during the period of fraction of microseconds. Furthermore, results of the investigation show that a simple capacitance network model is sufficient for study of the impulse voltage distribution across transformer windings..

*Keywords— Include Transient overvoltage, EMTDC/PSCAD, transformer model.*

## 1. INTRODUCTION

Transient study in electric power system can nowadays be done by simulation with the help of software packages dedicated for that purpose, such as EMTDC/PSCAD and others.

Studies that involve substation require a good skill and knowledge in how to model more or less correctly the equipment included in substation's model. There has been a lot of discussion regarding transient model of substation's main equipment, such as: power transformer, Surge Arrester and others.

So far, the transient model of a power transformer consists of a circuit of capacitance that represent the capacitance of the winding insulation to ground, and the inter-turn capacitance. To model properly a power transformer that could reproduce the phenomenon close to real situation is very important, especially if one wishes to study the stresses borne by the winding during occurrence of transient overvoltage [1,2,3].

To realize that goal, we experiments and simulation were conducted on a distribution power transformer whose capacity was: 100kVA, 20.000V/400V. To experimentally simulate a lightning current Surge Current Generator from Schaffner Type NSG 857 was utilized, which can produce surge current up to 7,5 kA of 8x20 microsecond.

In the experiment, current of 5 kA was injected to the transformer winding, and then the over voltage between the transformer HV-terminal and ground and also between the transformer conductor layer to ground were measured. From the measurement, a waveform and voltage distribution along the winding can then be obtained [6].

Further, simulations were conducted, by applying the same current waveform. The simulation was performed using the EMTDC/PSCAD; and the transformer constants included in the simulation have been derived from the physical dimension of the transformer winding [7].

## 2. TRANSFORMER CONSTRUCTION AND ITS CONSTANTS

Schematic drawing of the transformer investigated in the study can be seen in figure 1, where the HV-winding was constructed of 9 layers. The transformer was a three phase winding. In the experimental simulation, the surge current was injected to the tap 1 and the tap 9 connected to ground. These taps represent the HV-terminal and the neutral point of the transformer, respectively.

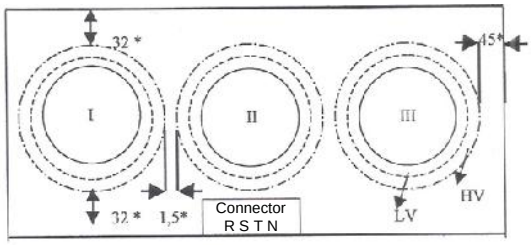


(a)

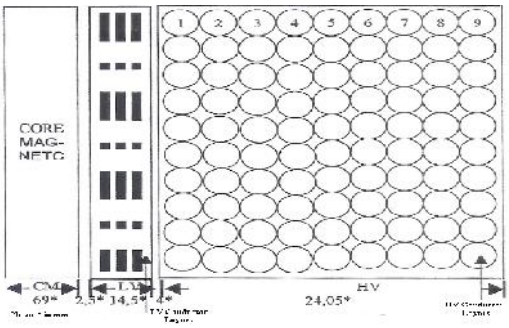


(b)

Figure 1: Construction of the transformer
a. Transformer under study
b. Inner construction of the transformer

The transformer's constants have been calculated from the physical dimension. Each winding layer corresponds with one transformer winding segment of the transformer model, where uniformly distributed, so each layer can be represented by a lumped circuit component [4,5,6].The inner-turn and winding-to-ground capacitance, inductance and resistance of transformer obtained from calculation based on physical dimension are shown in the table 1.

These transformer constants were calculated using the principle of transformer modeling as proposed in the reference [6].

TABLE I
TRANSFORMER CONSTANTS

| Conductor Layers | Capacitance (pF) | | Inductance | Resistance |
|---|---|---|---|---|
| *(from-to)* | Cs | Cg | (mH) | (Ohm) |
| $L_{1-1}$ | - | $3{,}4.10^{-4}$ | - | - |
| $L_{1-2}$ | $8{,}5.10^{-3}$ | $3{,}5.10^{-4}$ | 1.1 | 4 |
| $L_{1-3}$ | $8{,}7.10^{-3}$ | $3{,}7.10^{-4}$ | 1.1 | 4 |
| $L_{1-4}$ | $9{,}0.10^{-3}$ | $3{,}8.10^{-4}$ | 1.1 | 4 |
| $L_{1-5}$ | $9{,}2.10^{-3}$ | $4{,}0.10^{-4}$ | 1.1 | 4 |
| $L_{1-6}$ | $9{,}5.10^{-3}$ | $4{,}2.10^{-4}$ | 1.1 | 4 |
| $L_{1-7}$ | $9{,}7.10^{-3}$ | $4{,}4.10^{-4}$ | 1.1 | 4 |
| $L_{1-8}$ | $1{,}0.10^{-2}$ | $4{,}6.10^{-4}$ | 1.1 | 4 |
| $L_{1-9}$ | $1{,}02.10^{-2}$ | $4{,}8.10^{-4}$ | 1.1 | 4 |

## 3. CIRCUIT MODEL FOR EMTDC/PSCAD

In the numerical simulation, we applied the subroutine JMARTI SETUP where the transformer was considered as distributed and frequency-dependent parameters. The surge current used in the simulation was the type 15 of EMTDC/PSCAD.

In the simulation the following assumptions have also been adopted:

- The HV-winding under test was considered as isolated from the other two windings and from the LV-winding.
- The transformer was assumed as air-core transformer. This assumption was applied since the influence of iron only significant for the case of switching impulse.

In the study, the simulation was conducted using two type of circuit model; the first model included the transformer's capacitances only, while in the second all transformers' constants were taken into account. Figure 2 and figure 3 illustrate the transformer models 1 or 2 used in the simulation by EMTDC/PSCAD and figure 4 is the output from the system simulation.

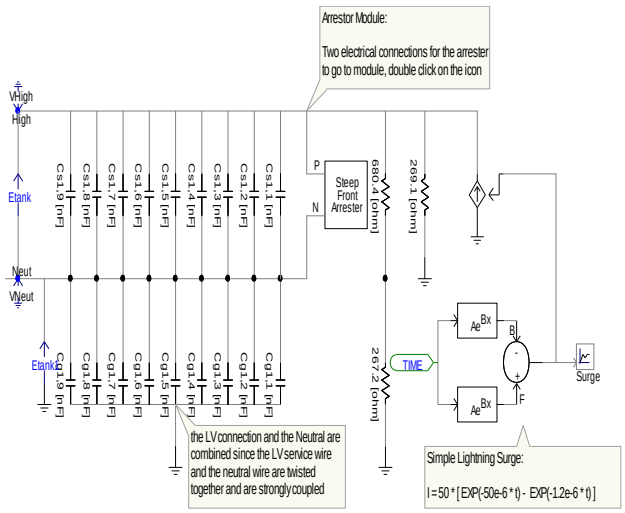


(a)

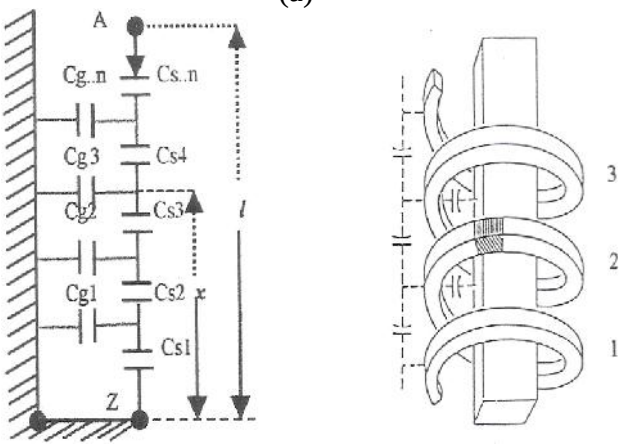


(b)

Figure 2 : Model 1, consisting of transformer's capacitances only.
(a) Simulation Model 1
(b) Schematics Model 1

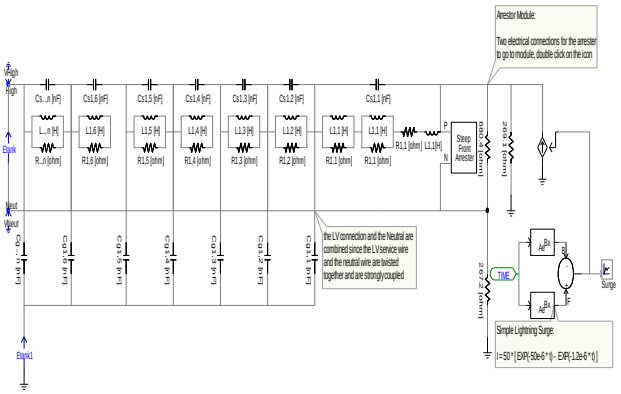

(a)

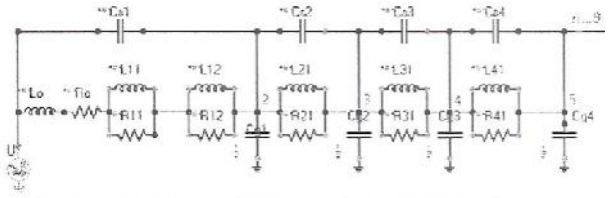

(b)

Figure 3:Model 2, including all parameters R, L, C

(a) Simulation Model 2 and
(b) (b) Schematics Model 2

Where:

| | |
|---|---|
| $Cg_1$; $Cg_2$... | :Capacitance between conductor layers to ground |
| $Cs_1$, $Cs_2$... | :Capacitance between layers |
| $L_{11}$, $L_{12}$, | :Inductance of each conductor layer |
| $R_{11}$, $R_{12}$, | :Resistance of each conductor layer |

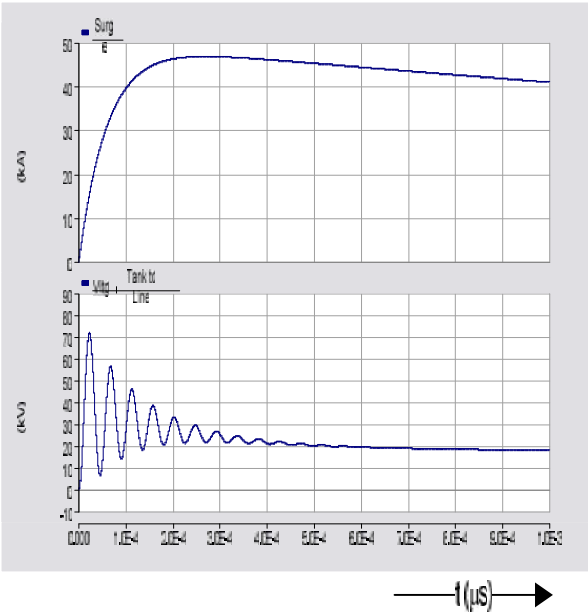


(a)

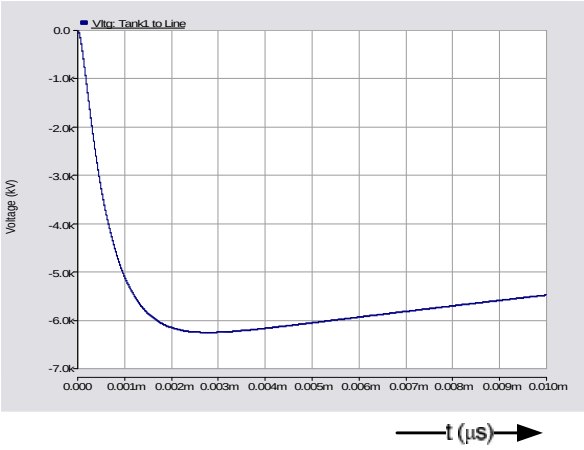


(b)

Figure 4: Output Simulation EMTDC/PSCAD Model 1, consisting of transformer's capacitances only.

(a) Output Cs Simulation Model 1 and
(b) Output Cg Simulation Model 1

## 4. EXPERIMENTAL SETUP

The experimental measurement was carried out with help of the setup shown in figure 5. The surge current was generated from the generator "Shaffner NSG 587", which can produce impulse current up to 5 kA peak value, with different waveform. In this simulation, we applied current waveform of 8/20µs.

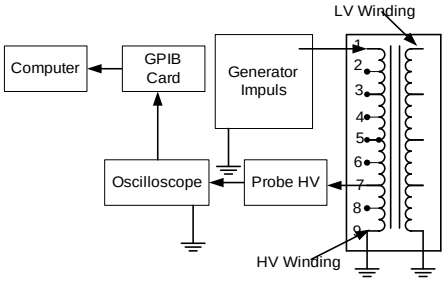


Figure 5: Experimental Setup

The experiments were done by injecting current to the upper terminal of the transformer, and the lower terminal was grounded through a metal strip of copper. The voltages measured at the winding taps were recorded by PC, which was connected to the oscilloscope through GPIB card. During the test, the LV-winding was short-circuited and connected to ground, as well.

## 5. RESULTS

Results of experimental measurement shown in the figure 6 indicate the behavior of the transformer, when surge current is injected to the HV terminal (at layer 1). The voltage measured at the conductor layers (L2, L5, L8) oscillate during the first 4 µs, where the highest voltage was at the layer L1 (the layer near to the transformer's HV terminal, the curve not presented in the figure 5). After 6µs the voltage at the layer tends to be stabilised.

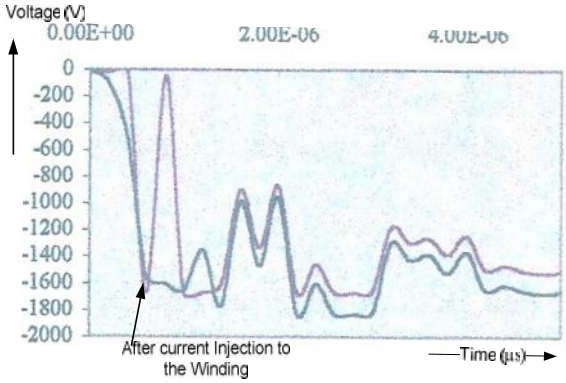


Figure 6: Voltages at the layers L2, L5, L8 during 6 µs after current injection to the winding.

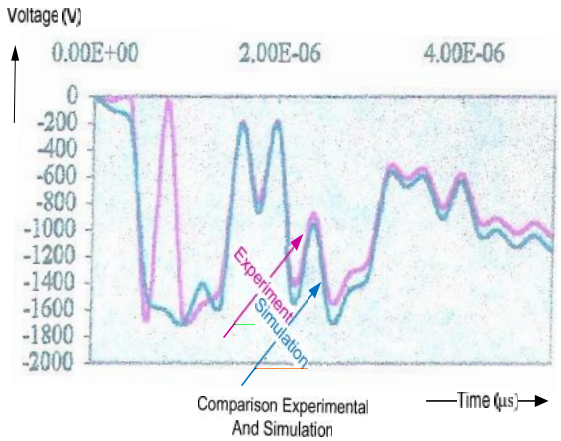


Figure 7: Comparison between experimental measurement and numerical simulation.

The figure 7 shows comparison between experimental measurement and numerical simulation.As can be seen, the discrepancy between the curves is important at t ≈ 1 µs. The curve obtained from the experimental measurement decreased toward zero.

After t ≈ 1 µs, the simulation and experimental measurement curves were in good concordance that means the response of the transformer can be adequately simulated. The numerical simulation shown in the figure 5 was obtained by using the model 2. Simulation by using the model 1 was not presented in this report, it gave however similar characteristic.

Results of the study show that the numerical simulation could not follow the real phenomena at the beginning of transient period (t <1µs), where at this

time period the capacitances have important influence during transient.

As the capacitance at each layer applied in the EMTP simulation has been obtained through approximate calculation and also assumed as lumped component, the response at higher frequencies would not follow exactly the phenomena. This might be caused by stray capacitances of the layers to ground, which play an important role for higher frequencies. Experimental curves of the layers L1 up to L9, show a sharp decrease at t ≈ 1 µs, which might eventually be due to reflection at ground terminal. Yet, this assumption is not very clear, and needs to be further investigated. The simulation curve shows in fact same decrease at that instance, but not very important.

From the comparison between experimental and numerical simulation it can be concluded that numerical calculation can simulate adequately transient characteristic of a transformer after some microseconds of surge current flowing through the winding. To simulate more or less precisely at t ≈ 0-1 µs proves to be difficult, since the estimation of the transformer capacitances could not be done precisely for higher frequency component of the surge currents.

However, from this study, it has been observed that the experimental measurements have given results, where the simulation curve is always higher than the measured ones. It means the simulation tends to result in more pessimistic values in overvoltage estimation.

Plot of voltage distribution at t ≈ 6 µs, both of experimental and numerical simulation (model 1 and 2) is presented in the figure 8.As already known from theory, the voltage gradient at the upper turns (nearest to the HV terminal) will be the most important. Nearly 60% of the voltage is born by layer 1 and layer 2.

Again, the simulation curve indicates more severe situation compared to the real condition.

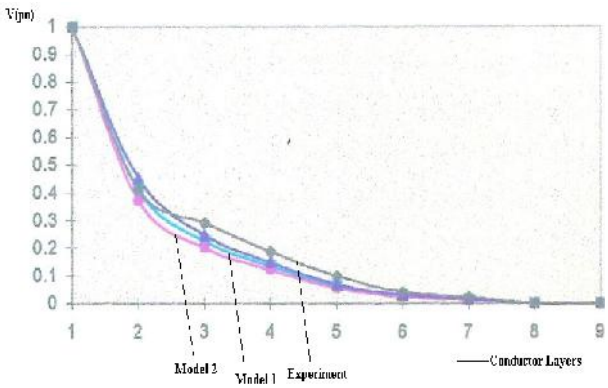


Figure 8: Comparison of voltage distribution obtained from experimental measurement and simulation, along the transformer winding at t ≈ 6 µs.

## 6. CONCLUSIONS

Transformer model used for transient condition is normally represented by its capacitance to ground, the value of which is so for given based on approximated value depending on the rated voltage and power capacity of transformer [6,8,9]. This very simple model can sufficiently represent the transformer when rough prediction on transient overvoltage due to lightning surge current is needed [7,11].

The study here presented shows that the more complete and detail model is sufficiently good for transient simulation. Somehow, the model could still not be quite precise when it concerns the first microseconds of the transient period. On the otherhand, after some microseconds the concordance between the simulation and measurement curves is good.

The information obtained from this study which can justify the estimation of transient overvoltage by numerical simulation, is the fact that it resulted in more pessimistic overvoltage values compared to the real condition [10].

From the study, it has been discovered that transformer capacitances, especially those of conduction layer to ground, had the most important role in numerical simulation. Our study shows that there is only small discrepancy of voltage values obtained by using the model 1 and model 2.

## 7. REFERENCES

[1] A. Marti, J.R and S. Chimklai,"Simplified Three-PhaseTransformer Model for Electromagnetic Transient Studies", IEEE Trans. On Power Delivery, Vol. 10, N0. 3, July, 1993

[2] B.V.Sumangala and G.R.Nagabhushana, "Analysis Of Surge Voltage Distribution In A Model Transformer For Different Types Of Surges With Turn Resolution And Its Validation". TENCON 2006. 2006 IEEE Region 10 Conference Digital Object Identifier: 10.1109/TENCON.2006.344190 Publication Year: 2006 , Page(s): 1 – 4.

[3] Mobammad S. Naderi, and M. Vakilian"A Method for Modeling Power Transformer Tap Winding for Transient Studies", Conference Record of the 2004 IEEE International Symposium on Electrical Insulation, Indianapolis, INUSA, 19-22 September 2004

[4] Morcheds, A.S., et al., "A High Frequency Transformer Model for the EMTP", IEEE Trans. On Power Delivery, Vol. 8, No. 3, July, 1993.

[5] Rodrigo H., and H.Q.S. Dang, "Behaviour of Transformer Winding Under Surge Voltages", Departement of Electrical Engineering, Royal Melbourne Institute of Tecnology, Australia, 1999.

[6] Xiaoyan Zhu,Huaying Dong,Guishu Liang andChanghuJi, "A new hybrid model of transformer windings under very fast transient overvoltages", Electrical Machines and Systems, 2008. ICEMS 2008. International Conference on Publication Year: 2008 , Page(s): 4296 – 4301
[7] Francis De Leon, Adam Semlyen "Complete Transformer Model for Electromagnetic Transients", IEEETransactions on Power Delivery, Vol.9, No. 1, January1994, pp 231-239.
[8] Pritinda, Chowdhuri, "Electrical Transient in Power System", Research Studies Press Ltd, John Willey & Sons Inc, England, 1996.
[9] Greenwood, A, "Electrical Transient in Power Systems", second edition, John Willey&Sons, Canada, 1991.
[10] "Electromagnetic Transient Program (EMTP) Application Guide",Westinghose Electric Corporaton Power Planning and Operation Program Electritical System Division, California, 1986.
[11] JouniPylvänäinen, KirsiNousiainen, and PekkaVerho, Studies to Utilise Calculated Condition Information and Measurements for Transformer Condition Assessment, International Review of Electrical Engineering,August 2009.Vol. 4. n. 4, pp. 684-689.

# About UNP ICTVET

This International Conference aims to create new ideas and innovation Concerning Education and Training on Vocational and Engineering Studies.
This Conference wishes to share various ideas on the basis of research findings, particularly in themes of :

1. Development of learning Model on TVET
2. Workplace learning and entrepreneurship
3. Innovation on applied engineering and information technology
4. Management and leadership on TVET
5. Vocational and Technical Teachers Education

# Digest Submission

Digests must be original material and have not been previously presented or published. All materials should be electronically submitted in DOC/DOCX file through the conference website no later than Sept 15, 2015. Selected papers will be published in International Journal of Geomate with **Scopus Indexed, GIF, Google Scholar, EBSCO, and Cengage Learning.**

Submission contribution for review may include:
- Regular paper (max 8 pages)
- Short papers (work in progress) (2-4 pages)
- Extended abstract (2 pages)
- Posters (2 pages)

The camera ready paper should be in regular version (max 6 pages). Paper selected for publication in conference supporting journals should be extended to avoid duplication.

All topics are open to academic, research and industry contribution, including policy development, technical report, and research in progress.

# Venue

**The Hills Bukittinggi Hotel & Convention**
Jln. Laras Dt. Bandaro bukittinggi 26115
Phone: +6275235000 fax:+6275223800
Website : www.thehillshotel.com

# Registration Fee

**International Presenter**
75 US$

**Indonesia Presenter**
500.000 IDR
350.000 IDR (For Student )

**Poster**
250.000 IDR

**Participant**
200.000 IDR
100.000 IDR (For Student)

# Method of Payment

**Bank Remittance**
Internasional Participant/Local Participant
a/n **Rahmadhani**
No Rek : 0186167831
Bank Negara Indonesia (BNI 46 Cabang UNP)

# Important Dates

| | |
|---|---|
| Abstract submission | : July 23, 2015 |
| Acceptance notification | : August 1, 2015 |
| Early bird registration | : August 24, 2015 |
| Full paper submission | : Sept 15, 2015 |
| Final Registration | : Oct 9, 2015 |
| Conference Days | : Oct 16-17, 2015 |

# Contacts

ICTVET Committee, Engineering Faculty
Universitas Negeri Padang
Jln. Prof. Dr. Hamka Air Tawar Padang, 25131
Attn. Krismadinata : +62-82283366554
Rusnardi Rahmat :+62-81364690484
Asrul Huda : +62-813 63 777 678
Rahmadhani: +62-81267 63 280
Selvia Larose +: +62-813 74 906 487
Phone : +62-751-7055644, +62-751-7053 3584
Facsimile : +62-751-7055644

FT-UNP

# UNP ICTVET 2015

## 3rd UNP International Conference on Technical and Vocational Education and Training (TVET)

**Bukittinggi, Indonesia**
**Oct 16-17, 2015**

**Technical and Vocational Education and Training for Sustainable Societies**

# CALL FOR PAPERS

KOPERTIS X

E-mail : ic-tvet@unp.ac.id,
ictvetunp@gmail.com
Website : http://ictvet.unp.ac.id

# Program Committee

**Hosting Organisation**
Engineering Faculty, Universitas Negeri Padang, Indonesia

**Advisory Board**
Rector of Universitas Negeri Padang

**Steering Committe**
**Prof. Dr. Nizwardi Jalinus, M.Ed**
Universitas Negeri Padang

**Prof. Ganefri, Ph.D**
Universitas Negeri Padang

**Prof. Noor Aisyah Buang**
Universitas Kebangsaan Malaysia

**Dr. Paryono**
SEAMEO/SEAVOC Brunei Darussalam

**Prof. Junji Kiyono**
University Kyoto, Japan

**Prof. Yusuke Ono**
Tottori University, Japan

**Prof. Vanapalli**
Ottawa University, Canada

**Prof. Nasrudin Abd. Rahim**
University of Malaya

**Prof. Rosli Omar**
UTeM Melaka

**Prof. Selamat Triono Ahmad, M.Sc., Ph.D**
Universitas Negeri Medan

**Prof. Dr. Ramlee Mustapa**
Universiti Pendidikan Sultan Idris (UPSI) Malaysia

# Venue

**The Hills Bukittinggi Hotel & Convention**
Jln. Laras Dt. Bandaro bukittinggi 26115
Phone: +6275235000 fax:+6275223800
Website : www.thehillshotel.com

**Organizing Committee**
Prof. Dr. Nizwardi Jalinus, M.Ed

**Technical and Scientific Committee**
Rusnardi Rahmat Putra, Ph.D
Krismadinata, Ph.D
Dr. Nurhasan Syah Dt. Maruhun, M.Pd
Dr. Ridwan, M.Sc. Ed.

# Keynote Speaker

**Prof. Dr. M. Nasir**
(Ministry of Research, Technology and Higher Education)

**Prof. Nasrudin Abd. Rahim**
(University of Malaya)

**Prof. Junji Kiyono**
(University Kyoto, Japan)

**Prof. Chih-Tsong Su, Ph.D**
Kohsylong University Taiwan

**Syahril, Ph.D**
(Dean of Engineering Faculty, Universitas Negeri Padang)

# Contacts


ICTVET Committee, Engineering Faculty
Universitas Negeri Padang
Jln. Prof. Dr. Hamka Air Tawar Padang, 25131
Attn. Krismadinata : +62-82283366554
Rusnardi Rahmat : +62-81364690484
Asrul Huda : +62-813 63 777 678
Rahmadhani: +62-81267 63 280
Selvia Larose +: +62-813 74 906 487
Phone : +62-751-7055644, +62-751-7053 3584
Facsimile : +62-751-7055644
E-mail : ic-tvet@unp.ac.id, ictvetunp@gmail.com
Website : http://ictvet.unp.ac.id


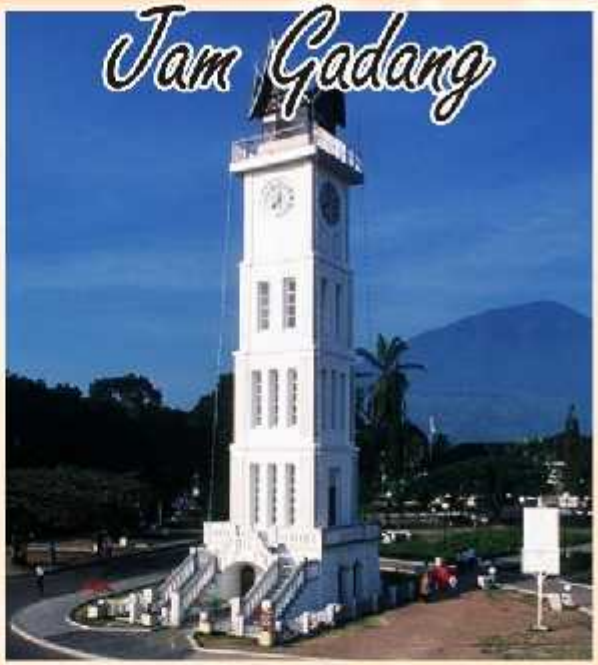


Big Ben Tower is the name for the tower clock located in the center of Bukittinggi, West Sumatra, Indonesia. This clock has a tower with a large building on the four sides so-called Clock Tower, designation Minangkabau language meaning "big ben".


Japan holes Bukittinggi (also spelled Japanese hole) is one of the historical attractions in the city of Bukittinggi, West Sumatra, Indonesia. Japan hole is a tunnel (bunker) protection built Japanese occupation army around 1942 for defense purposes.


Sianok Canyon is a steep valley (ravine) located in the border town of Bukittinggi, in the district IV Koto, Agam, West Sumatra. The valley is elongated and meandering as the southern boundary of the city of Koto Gadang to nagari Sianok Anam Tribe, and ends in the district Palupuh. Sianok canyon has a very beautiful view and also became one of the flagship attraction province.

Sumber:
http://bukittinggi.wisata.com
http://id.wikipedia.org